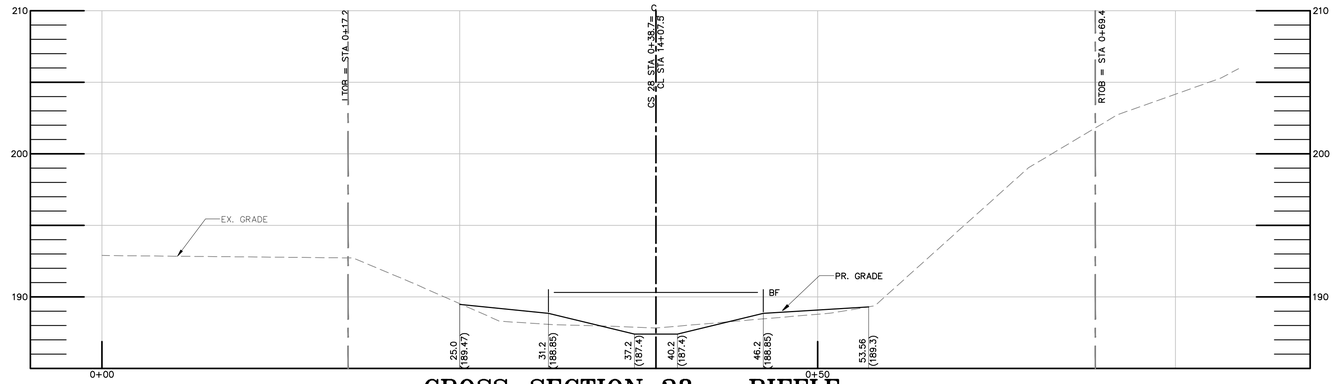

CROSS-SECTION 28 – RIFFLE

SCALE: HORIZONTAL 1" = 5'
VERTICAL 1" = 5'

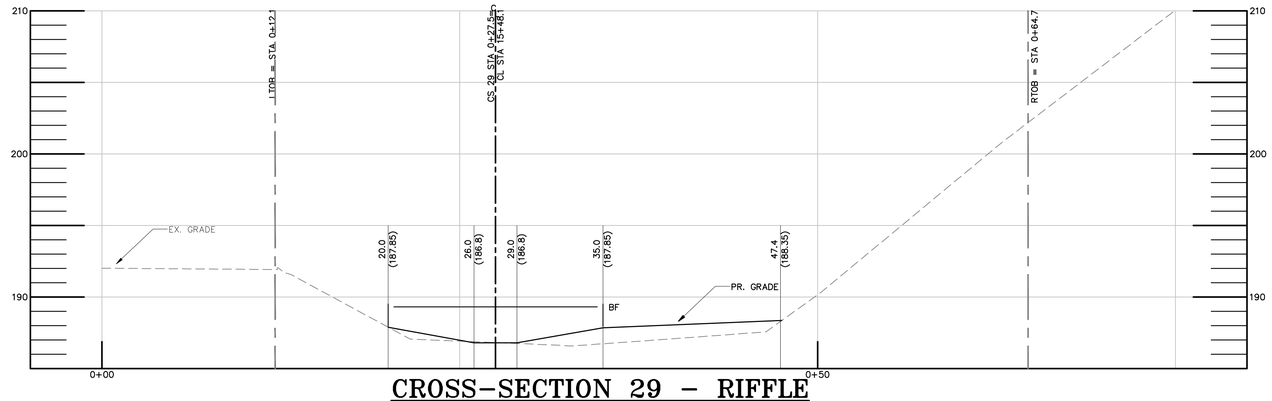

CROSS-SECTION 29 – RIFFLE

SCALE: HORIZONTAL 1" = 5'
VERTICAL 1" = 5'

DDOE DISTRICT DEPARTMENT OF THE ENVIRONMENT

GOVERNMENT OF THE DISTRICT OF COLUMBIA
DISTRICT DEPARTMENT OF THE ENVIRONMENT
1200 FIRST STREET NE, WASHINGTON, DC 20002

GREENHORNE & O'MARA
CONSULTING ENGINEERS
6110 FROST PLACE LAUREL, MD 20707
PHONE: (301) 982-2800 FAX: (301) 220-2619
www.g-and-o.com
FLORIDA KANSAS MARYLAND NORTH CAROLINA PENNSYLVANIA VIRGINIA WEST VIRGINIA

CLEAR CREEKS CONSULTING
1317 Knopp Road, Jarrettsville, Maryland 21084
(410) 692-2164

BayLand Consultants & Designers, Inc.
"Integrating Engineering and Environment"
1321Mercedes Drive, Suite C Hanover, Maryland 21076

MAIN CHANNEL CROSS SECTIONS 28 –

FOR

BROAD BRANCH STREAM RESTORATION PRO.

WASHINGTON, DISTRICT OF COLUMBIA

OCTOBER 2010

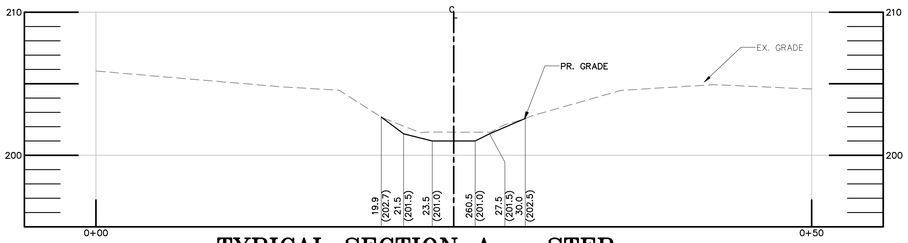

TYPICAL SECTION A – STEP

SCALE: HORIZONTAL 1" = 5'
VERTICAL 1" = 5'

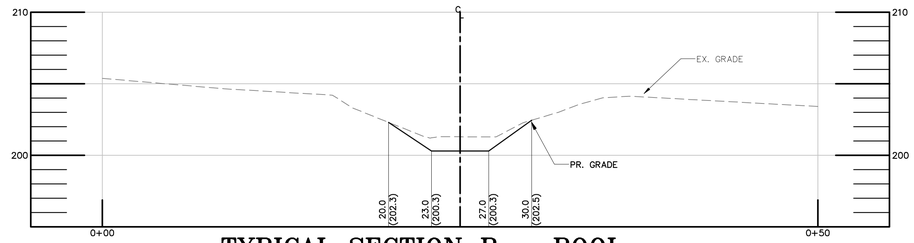

TYPICAL SECTION B – POOL

SCALE: HORIZONTAL 1" = 5'
VERTICAL 1" = 5'

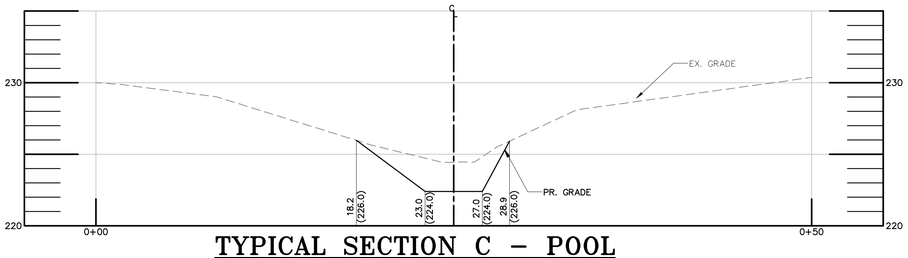

TYPICAL SECTION C – POOL

SCALE: HORIZONTAL 1" = 5'
VERTICAL 1" = 5'

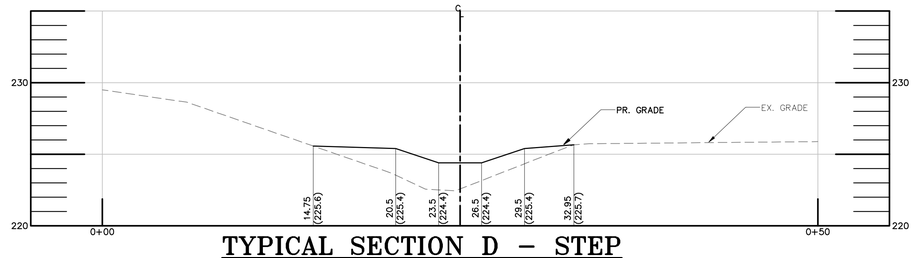

TYPICAL SECTION D – STEP

SCALE: HORIZONTAL 1" = 5'
VERTICAL 1" = 5'

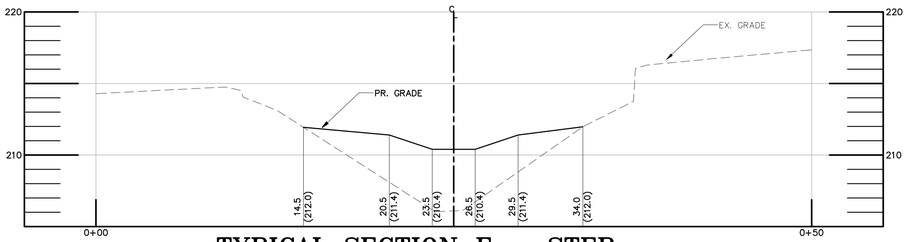

TYPICAL SECTION E – STEP

SCALE: HORIZONTAL 1" = 5'
VERTICAL 1" = 5'

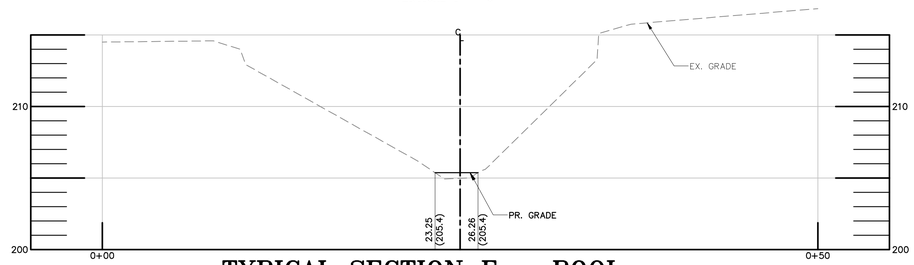

TYPICAL SECTION F – POOL

SCALE: HORIZONTAL 1" = 5'
VERTICAL 1" = 5'

DDOE DISTRICT DEPARTMENT OF THE ENVIRONMENT

GOVERNMENT OF THE DISTRICT OF COLUMBIA
DISTRICT DEPARTMENT OF THE ENVIRONMENT
1200 FIRST STREET NE, WASHINGTON, DC 20002

GREENHORNE & O'MARA
CONSULTING ENGINEERS
6110 FROST PLACE LAUREL, MD 20707
PHONE: (301) 982-2800 FAX: (301) 220-2619
www.g-and-o.com
FLORIDA KANSAS MARYLAND NORTH CAROLINA PENNSYLVANIA VIRGINIA WEST VIRGINIA

CLEAR CREEKS CONSULTING
1317 Knopp Road, Jarrettsville, Maryland 21084 (410) 692-2164

BayLand Consultants & Designers, Inc.
"Integrating Engineering and Environment"
1321Mercedes Drive, Suite C Hanover, Maryland 21076

TRIBURARY CROSS SECTIONS
FOR
BROAD BRANCH STREAM RESTORATION PRO.
WASHINGTON, DISTRICT OF COLUMBIA

OCTOBER 2010 | SHEET NO. 27 OF

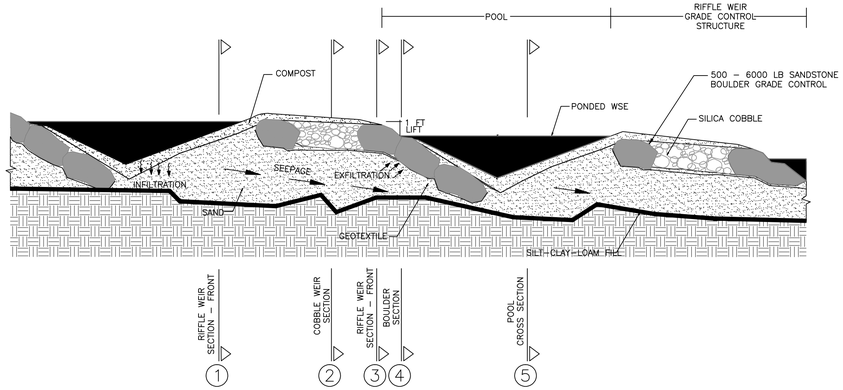

PROFILE TYPICAL WEIR/POOL MAIN CHANNEL

SCALE: NOT TO SCALE

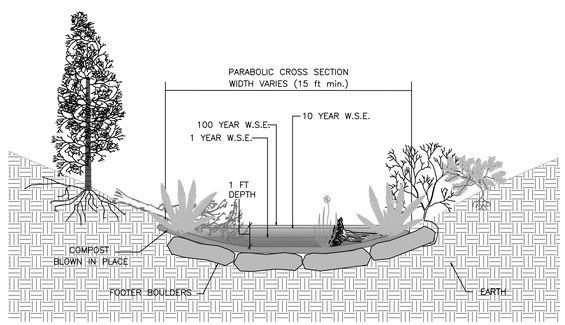

1 RIFFLE WEIR SECTION – BACK

SCALE: NOT TO SCALE

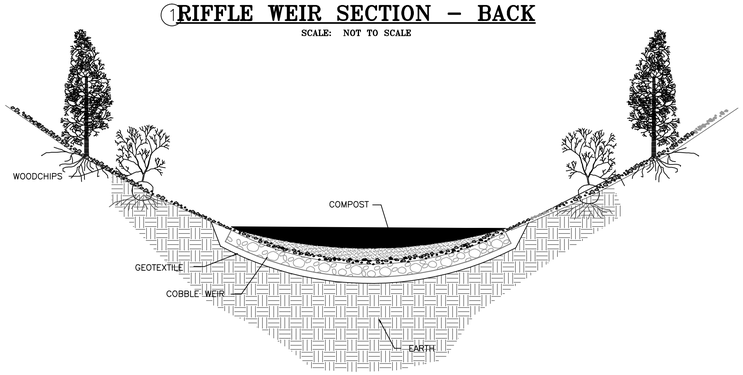

2 COBBLE WEIR SECTION

SCALE: NOT TO SCALE

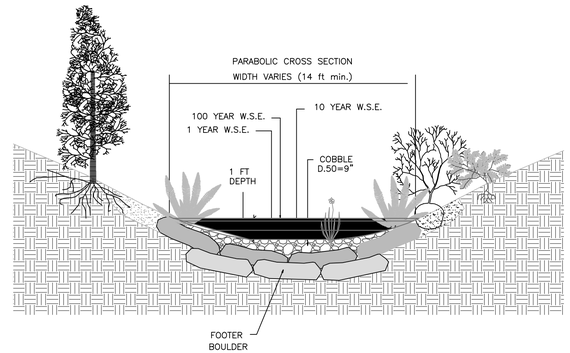

3 RIFFLE WEIR SECTION – FRONT

SCALE: NOT TO SCALE

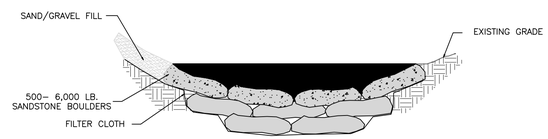

4 BOULDER SECTION

SCALE: NOT TO SCALE

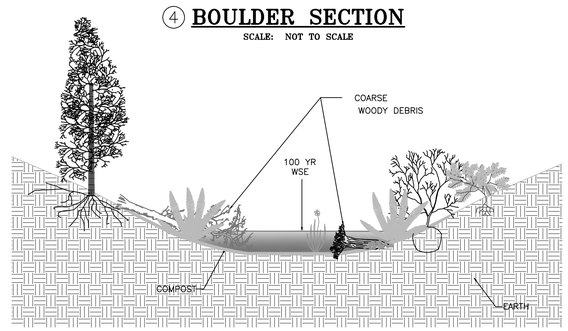

5 POOL SECTION

SCALE: NOT TO SCALE

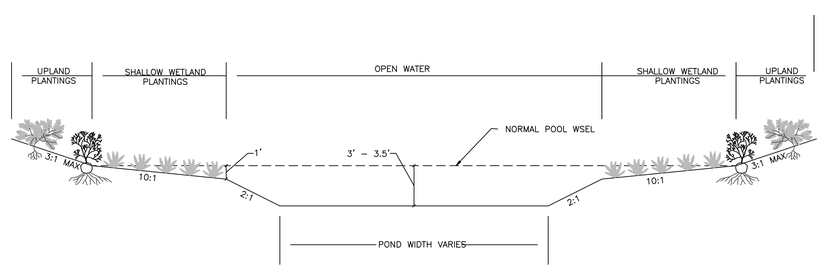

TYPICAL POND SECTION

SCALE: NOT TO SCALE

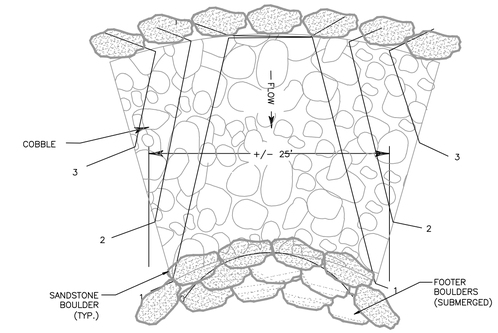

WEIR DESIGN: LENGTH 25' X WIDTH 25' X DEPTH 2.5'
COBBLE SIZE: d50, 9"
BOULDERS RANGE: 3'X2'X2' TO 6'X2'X2'

WEIR WITH BOULDER DETAIL

SCALE: NOT TO SCALE

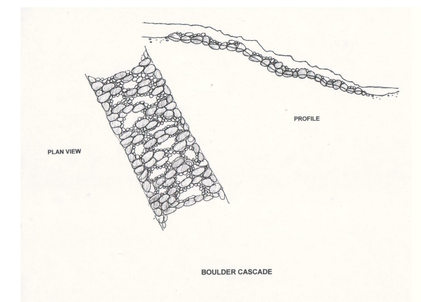

BOULDER CASCADE DETAIL

SCALE: NOT TO SCALE

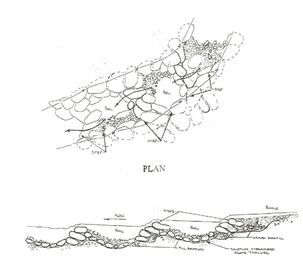

BOULDER STEP–POOLS DETAIL

SCALE: NOT TO SCALE

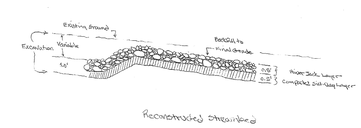

PROPOSED STREAM BED SECTION

SCALE: NOT TO SCALE

DDOE DISTRICT DEPARTMENT OF THE ENVIRONMENT

GOVERNMENT OF THE DISTRICT OF COLUMBIA
DISTRICT DEPARTMENT OF THE ENVIRONMENT
1200 FIRST STREET NE, WASHINGTON, DC 20002

G&O
GREENHORNE & O'MARA
CONSULTING ENGINEERS
6110 FROST PLACE LAUREL, MD 20707
PHONE: (301) 982-2800 FAX: (301) 220-2619
www.g-and-o.com
FLORIDA KANSAS MARYLAND NORTH CAROLINA PENNSYLVANIA VIRGINIA WEST VIRGINIA

CLEAR CREEKS CONSULTING
1317 Knopp Road, Jarrettsville, Maryland 21084 (410) 692-2164

BayLand Consultants & Designers, Inc.
"Integrating Engineering and Environment"
1321Mercedes Drive, Suite C Hanover, Maryland 21076

MAIN CHANNEL DETAILS
FOR
BROAD BRANCH STREAM RESTORATION PROJECT
WASHINGTON, DISTRICT OF COLUMBIA

JANUARY 2011 SHEET NO. 28 OF 39

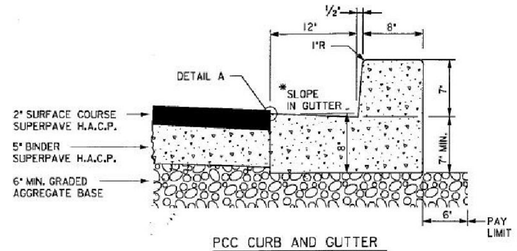

PCC CURB AND GUTTER
WITH FLEXIBLE PAVEMENT

NOTES:

1. TIE ROD ASSEMBLY TO BE INSTALLED AT 5 IN. OF THE INITIAL POUR.
2. #4 BARS SHALL NOT EXTEND THROUGH THE EXPANSION JOINT.
3. * LOW SIDE - 1 IN. PER FT. TOWARD CURB.
   * HIGH SIDE - 3/8 IN. PER FT. AWAY FROM CURB.
4. 6 IN. MIN. DEPTH GRADED AGGREGATE BASE APPLIES TO AREA BENEATH ROADWAY AND CURB AND GUTTER.

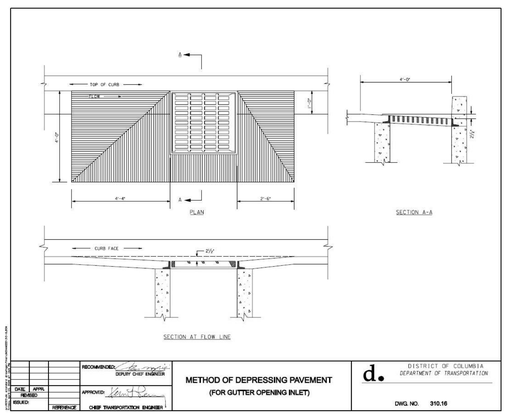

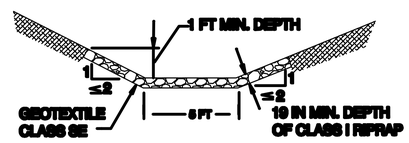

OUTFALL RIPRAP PROTECTION CROSS SECTION

NOTES:

1. **CONSTRUCT SWALE ON AN UNINTERRUPTED, CONTINUOUS GRADE, ADJUSTING THE LOCATION DUE TO FIELD CONDITIONS NECESSARY FOR POSITIVE DRAINAGE.**
2. **PROVIDE GEOTEXTILE CLASS SE UNDER ALL RIPRAP.**
3. **PROVIDE OUTLET PROTECTION AS REQUIRED ON PLAN.**
4. **REMOVE AND DISPOSE OF ALL TREES, BRUSH, STUMPS, OBSTRUCTIONS, AND OTHER OBJECTIONABLE MATERIAL SO AS NOT TO INTERFERE WITH PROPER FUNCTION OF SWALE.**
5. **EXCAVATE OR SHAPE SWALE TO LINE, GRADE, AND CROSS SECTION AS SPECIFIED. BANK PROJECTIONS OR OTHER IRREGULARITIES THAT IMPEDE FLOW ARE NOT ALLOWED**
6. **STABILIZE SWALE WITHIN THREE DAYS OF INSTALLATION. STABILIZE SURFACES IN CONTACT WITH CLEAR WATER WITHIN 24 HOURS.**
7. **INSPECT AND PROVIDE NECESSARY MAINTENANCE PERIODICALLY AND AFTER EACH RAIN EVENT.**

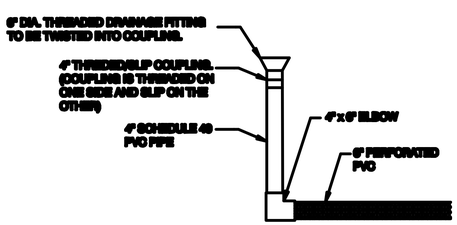

OVERFLOW AND CLEANOUT PIPE CONFIGURATION
NOT TO SCALE

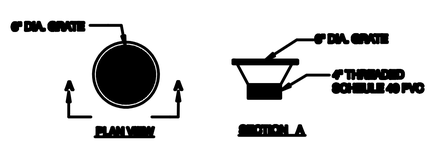

DRAINAGE FITTING DETAIL
NOT TO SCALE

DDOE DISTRICT DEPARTMENT OF THE ENVIRONMENT

GOVERNMENT OF THE DISTRICT OF COLUMBIA
DISTRICT DEPARTMENT OF THE ENVIRONMENT
1200 FIRST STREET NE, WASHINGTON, DC 20002

GREENHORNE & O'MARA
CONSULTING ENGINEERS
6110 FROST PLACE LAUREL, MD 20707
PHONE: (301) 982-2800 FAX: (301) 220-2619
www.g-and-o.com
FLORIDA KANSAS MARYLAND NORTH CAROLINA PENNSYLVANIA VIRGINIA WEST VIRGINIA

CLEAR CREEKS CONSULTING
1317 Knopp Road, Jarrettsville, Maryland 21084 (410) 692-2164

BayLand Consultants & Designers, Inc.
"Integrating Engineering and Environment"
1321Mercedes Drive, Suite C Hanover, Maryland 21076

STORMWATER RECHARGE FACILITY & 36TH ST. DETAILS
FOR
BROAD BRANCH STREAM RESTORATION PROJECT
WASHINGTON, DISTRICT OF COLUMBIA

JANUARY 2011 | SHEET NO. 29 OF 39

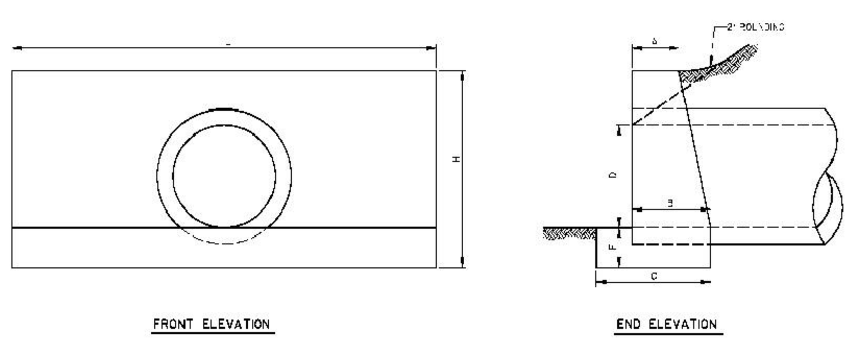

	DIAMETER OF PIPE CULVERT (D)					
	12	15'	18	24'	30'	36'
A	0'-6	0'-8	0'-9	0'-	1'-0"	1'-0"
B	0'-1"	1'-1/2	1'-3	1'-6"	1'-9	2'-0"
C	1'-4	1'-7	1'-9	2'-2	2'-5"	2'-9"
F	0'-6	0'-8	0'-8	0'-9"	0'-9	0'-9"
H	2'-3"	2'- "	3'-2"	3'-9	4'-3"	4'-9"
L	4'-0	5'-0	6'-0"	6'-0"	10'-0"	2'-0

SEE DWG. NO. 320.05 FOR STEEL REINFORCING

CUBIC YARDS CONCRETE						
CONC. PIPE	0.241	0.492	0.697	.319	2.057	2.547
C. M. PIPE	0.257	0.52	0.739	.355	2.98	3.146

NOTE: HEADWALL TO BE MODIFIED BY ADDING 45% WING WALLS TO BOTH SIDES.

DATE | APPR. | REVISED | ISSUED: | REFERENCE
RECOMMENDED: DEPUTY CHIEF ENGINEER
APPROVED: CHIEF TRANSPORTATION ENGINEER

ENDWALLS
FOR 12" - 36" PIPE CULVERTS

d. DISTRICT OF COLUMBIA DEPARTMENT OF TRANSPORTATION
DWG. NO. 320.02

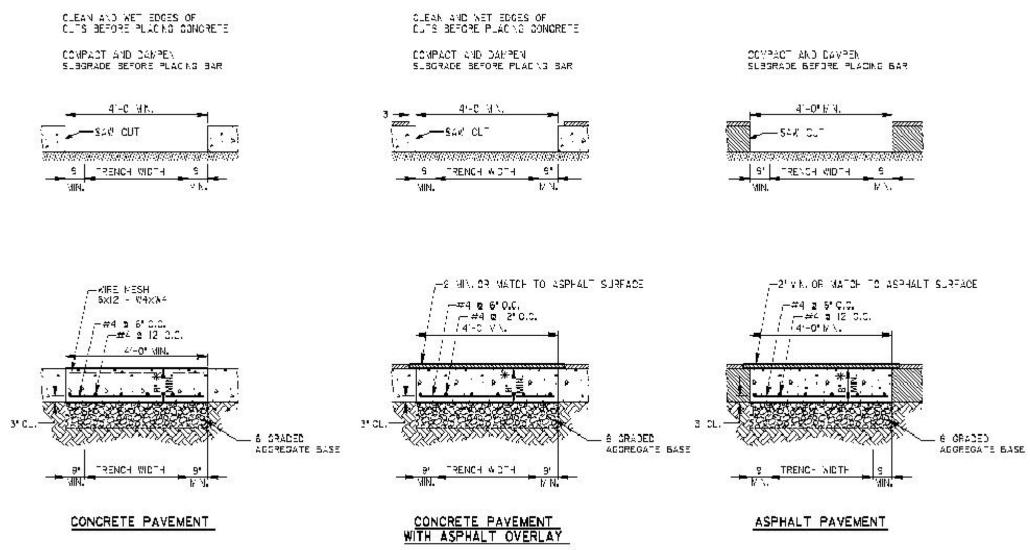

*8 MIN. OR MATCH TO EXIST. PAVEMENT SECTION

NOTES:
1. ALL EXPOSED EDGES OF EXISTING ASPHALT AND SURFACE OF CONCRETE BASE SHALL BE PRIMED BEFORE ASPHALT MIXTURE IS PLACED.
2. IF THE TRENCH CUT OCCURS NEAR EXISTING PAVEMENT JOINTS, PERFORM PAVEMENT REPAIR WORK ACCORDING TO DETAILS SHOWN ON DWG. 501.01 THRU 501.10.

RECOMMENDED: DEPUTY CHIEF ENGINEER
APPROVED: CHIEF TRANSPORTATION ENGINEER
DATE | APPR. | REVISED | ISSUED: | REFERENCE

TRENCH REPAIR DETAIL

d. DISTRICT OF COLUMBIA DEPARTMENT OF TRANSPORTATION
DWG. NO. 207.01

DISTRICT OF COLUMBIA
WATER AND SEWER AUTHORITY
S-30.11
1 OF 1

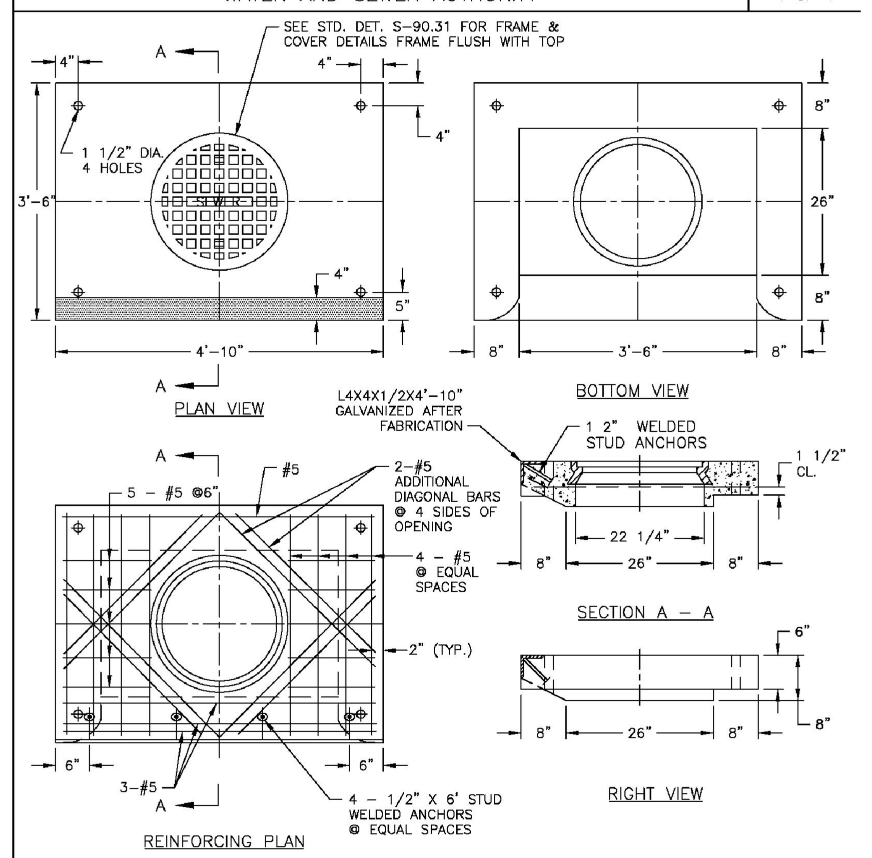

NOTES:
1. SEE SPECIFICATIONS
2. CLASS 4000 CONCRETE, AIR ENTRAINED, TYPE II CEMENT.
3. REINFORCING STEEL, ASTM A615, GRADE 60, 1 1/2" CLEAR COVER UNLESS NOTED
4. STEEL ANGLE PER ASTM A36, GALVANIZED PER ASTM A123
5. STUD ANCHORS SHALL BE LOW CARBON STEEL, ASTM A108, TYPE H4L NELSON HEADED ANCHORS WITH FLUXED ENDS, BY NELSON STUD WELDING CO. OR APPROVED EQUAL

APPROVED DATE: June 20, 2003
DIRECTOR, DEPARTMENT OF ENGINEERING AND TECHNICAL SERVICES
REVISION NO.: 0
DATE: 6/20/03
PREPARED BY: OBG/BKJV
CHECKED BY: W.DARROW

STANDARD DETAIL
8" PRECAST STANDARD CATCH BASIN TOP

DISTRICT OF COLUMBIA
WATER AND SEWER AUTHORITY
S-12.01
1 OF 2

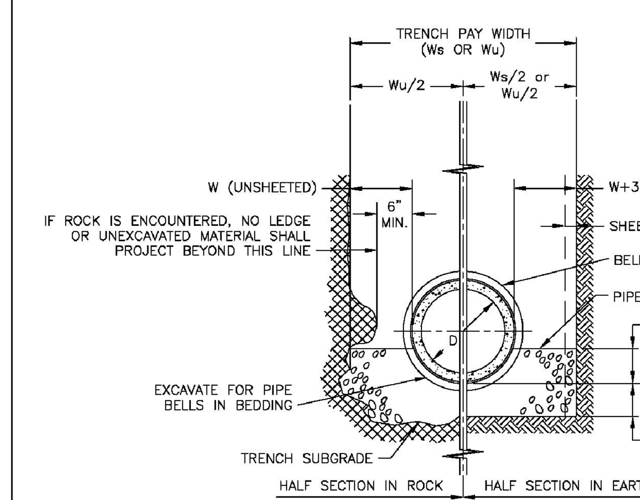

APPROVED DATE: June 20, 2003
DIRECTOR, DEPARTMENT OF ENGINEERING AND TECHNICAL SERVICES
REVISION NO.: 0
DATE: 6/20/03
PREPARED BY: OBG/BKJV
CHECKED BY: W.DARROW

STANDARD DETAIL
CONCRETE PIPE SEWER
TRENCH LAYING CONDITION

DISTRICT OF COLUMBIA
WATER AND SEWER AUTHORITY
S-12.01
2 OF 2

PIPE DIAMETER	PIPE BEDDING DIMENSION				TRENCH PAY WIDTH	
D	W	A	B		UNSHEETED Wu	SHEETED Ws
			IN SOIL	IN ROCK		
12"	12"	5"	3"	6"	3' - 4"	3' - 10"
15"	12"	5"	3"	6"	3' - 7"	4' - 1"
18"	12"	6"	3"	6"	3' - 11"	4' - 5"
21"	12"	7"	3"	6"	4' - 3"	4' - 9"
24"	12"	8"	3"	6"	4' - 6"	5' - 0"
27"	18"	8"	3"	6"	5' - 9"	6' - 3"
30"	18"	9"	4"	9"	6' - 1"	6' - 7"
33"	18"	10"	4"	9"	6' - 5"	6' - 11"
36"	18"	10"	4"	9"	6' - 8"	7' - 2"
42"	18"	13"	4"	9"	7' - 3"	7' - 9"
48"	24"	15"	4"	9"	8' - 10"	9' - 4"
54"	24"	16"	4"	9"	9' - 5"	9' - 11"
60"	24"	18"	4"	9"	10' - 0"	10' - 6"
66"	24"	20"	6"	12"	10' - 7"	11' - 1"
72"	24"	22"	6"	12"	11' - 2"	11' - 8"
78"	24"	23"	6"	12"	11' - 9"	12' - 3"
84"	24"	25"	6"	12"	12' - 4"	12' - 10"
90"	24"	27"	6"	12"	12' - 11"	13' - 5"
96"	24"	28"	6"	12"	13' - 6"	14' - 0"
102"	24"	30"	6"	12"	14' - 1"	14' - 7"
108"	24"	32"	6"	12"	14' - 8"	15' - 2"

NOTES:
1. IF NECESSARY TO EXCEED W BELOW A HORIZONTAL PLANE 1'-0" ABOVE TOP OF PIPE, SEE SPECIFICATION SECTION 02220.
2. SHEETING, IF USED, SHALL BE REMOVED IN CONJUNCTION WITH THE BACKFILLING OPERATION UNLESS OTHERWISE SPECIFIED OR SHOWN ON DRAWING. HOWEVER, IF APPROVED IN WRITING, SHEETING MAY BE CUT-OFF AND LEFT IN PLACE BELOW A LINE 1'-0" ABOVE THE TOP OF THE PIPE OR AS DIRECTED BY THE ENGINEER.

APPROVED DATE: June 20, 2003
DIRECTOR, DEPARTMENT OF ENGINEERING AND TECHNICAL SERVICES
REVISION NO.: 0
DATE: 6/20/03
PREPARED BY: OBG/BKJV
CHECKED BY: W.DARROW

STANDARD DETAIL
CONCRETE PIPE SEWER
TRENCH LAYING CONDITION

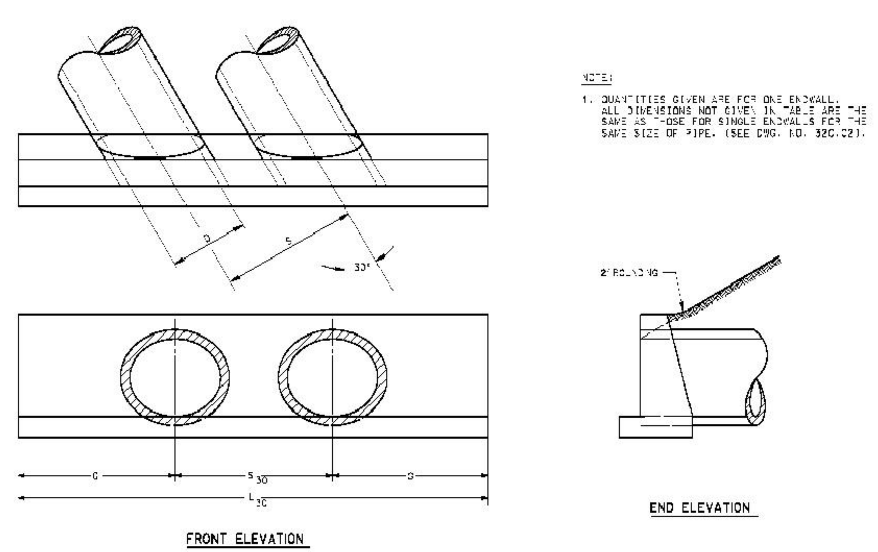

NOTE:
1. QUANTITIES GIVEN ARE FOR ONE ENDWALL. ALL DIMENSIONS NOT GIVEN IN TABLE ARE THE SAME AS THOSE FOR SINGLE ENDWALLS FOR THE SAME SIZE OF PIPE. (SEE DWG. NO. 320.02).

FOR CONCRETE PIPE						
DIA. (D) OF PIPE	G	S	S 30	L 30	CU. YDS. CONC. ONE DOUBLE ENDWALL	INCREASE CU. YDS. EACH ADD. PIPE
12"	2'-0	1'-0"	2'-3/4	6'-3/4	0.336	0.10
15"	2'-6	2'-3	2'-7 1/8"	7'-7 1/4	0.688	0.207
18"	3'-0	2'-6	3'-	9'-	0.962	0.283
24	4'-0	3'-6"	4'-0 1/2	2'-0 1/2"	1.794	0.512
30"	5'-0	4'-4	5'-0	5'-0	2.769	0.765
36	6'-0"	5'-2	5'-3/4	7'-5/8"	3.595	.048

FOR CORRUGATED METAL PIPE						
DIA. (D) OF PIPE	G	S	S 30	L 30	CU. YDS. CONC. ONE DOUBLE ENDWALL	INCREASE CU. YDS. EACH ADD. PIPE
2'	2'-0"	1'-7	1'-0"	5'-0	0.364	0.100
5'	2'-6"	1'-11 1/2	2'-3/4"	7'-3 1/8"	0.714	0.20
8'	3'-0"	2'-4"	2'-8 3/4"	8'-6 5/8"	1.005	0.278
24"	4'-0"	3'-	3'-6 3/4"	1'-6 3/4"	1.882	0.5 0
30	5'-0"	3'-0	4'-5/8"	4'-5 1/8"	2.929	0.775
36	6'-0	4'-7"	5'-3/2"	7'-3 1/2"	4.153	1.073

DATE | APPR. | REVISED | ISSUED: | REFERENCE
RECOMMENDED: DEPUTY CHIEF ENGINEER
APPROVED: CHIEF TRANSPORTATION ENGINEER

ENDWALLS
FOR MULTIPLE PIPE CULVERTS
12"-36" PIPES - 30 SKEW

d. DISTRICT OF COLUMBIA DEPARTMENT OF TRANSPORTATION
DWG. NO. 320.04

DISTRICT OF COLUMBIA
WATER AND SEWER AUTHORITY
S-20.12
1 OF 1

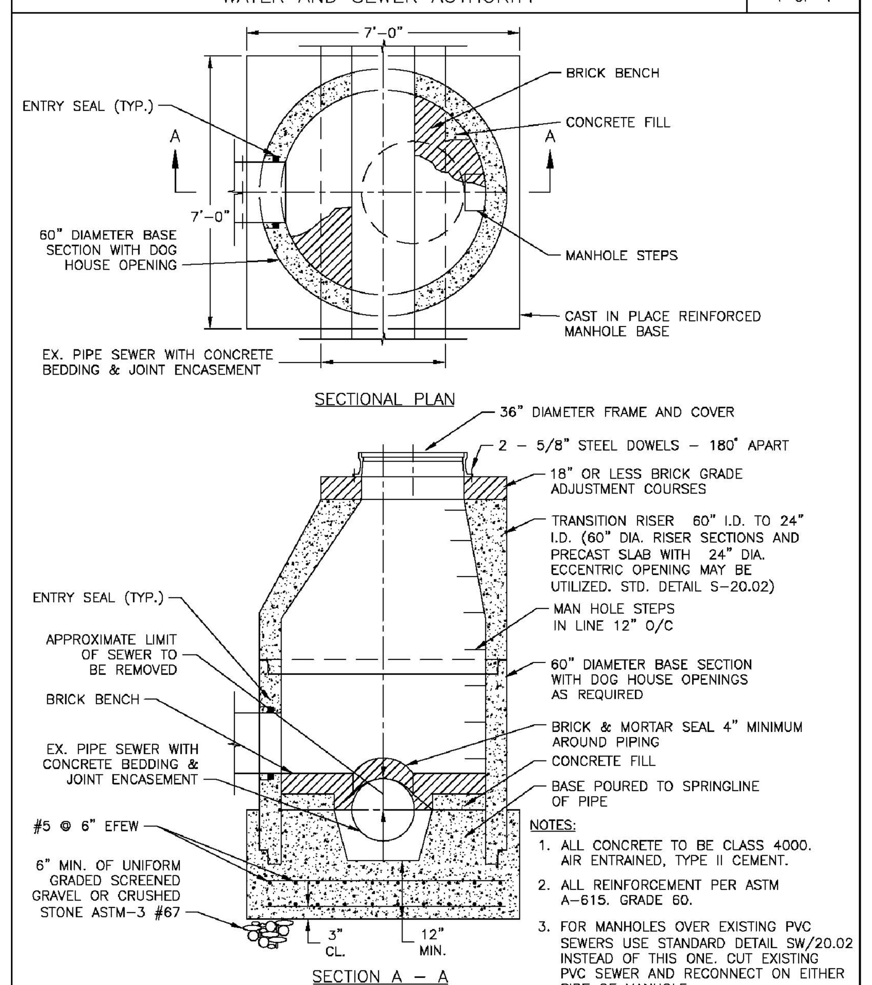

NOTES:
1. ALL CONCRETE TO BE CLASS 4000. AIR ENTRAINED, TYPE II CEMENT.
2. ALL REINFORCEMENT PER ASTM A-615. GRADE 60.
3. FOR MANHOLES OVER EXISTING PVC SEWERS USE STANDARD DETAIL SW/20.02 INSTEAD OF THIS ONE. CUT EXISTING PVC SEWER AND RECONNECT ON EITHER SIDE OF MANHOLE

APPROVED DATE: June 20, 2003
DIRECTOR, DEPARTMENT OF ENGINEERING AND TECHNICAL SERVICES
REVISION NO.: 0
DATE: 6/20/03
PREPARED BY: OBG/BKJV
CHECKED BY: W.DARROW

STANDARD DETAIL
PRECAST CONCRETE MANHOLE OVER EXISTING 24" THRU 30" DIAMETER SEWERS WITH CAST IN PLACE CONCRETE BASE

DISTRICT OF COLUMBIA
WATER AND SEWER AUTHORITY
S-30.06
1 OF 1

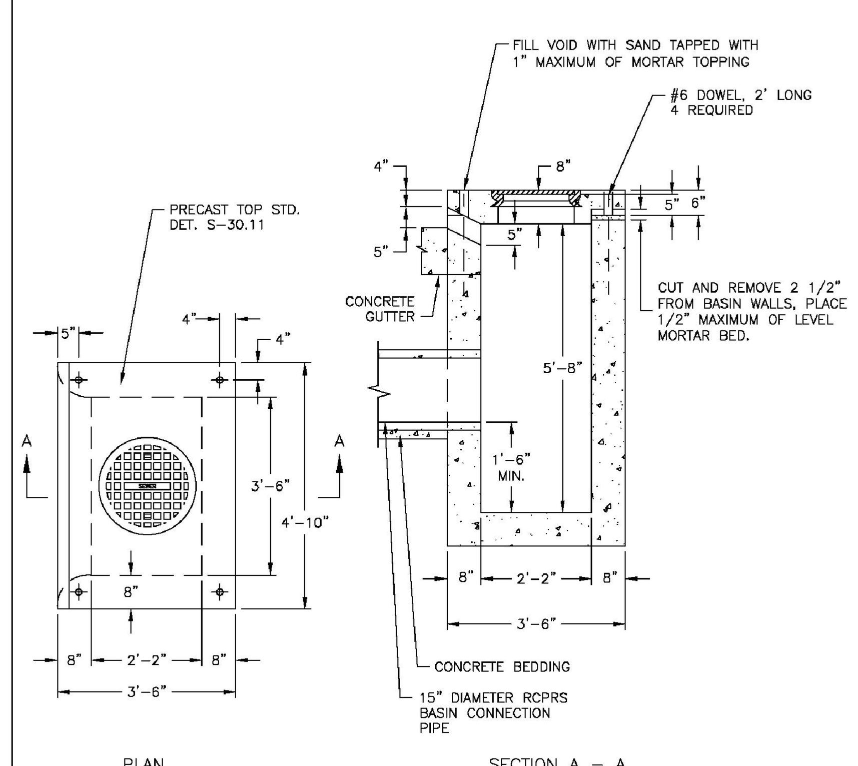

NOTE:
ALL CONCRETE TO BE CLASS 4000, AIR ENTRAINED, TYPE II CEMENT.

APPROVED DATE: June 20, 2003
DIRECTOR, DEPARTMENT OF ENGINEERING AND TECHNICAL SERVICES
REVISION NO.: 0
DATE: 6/20/03
PREPARED BY: OBG/BKJV
CHECKED BY: W.DARROW

STANDARD DETAIL
STANDARD CATCH BASIN MODIFICATION FOR PLACEMENT OF 8" PRECAST STANDARD CATCH BASIN TOP

DISTRICT OF COLUMBIA
WATER AND SEWER AUTHORITY
S-12.02
1 OF 1

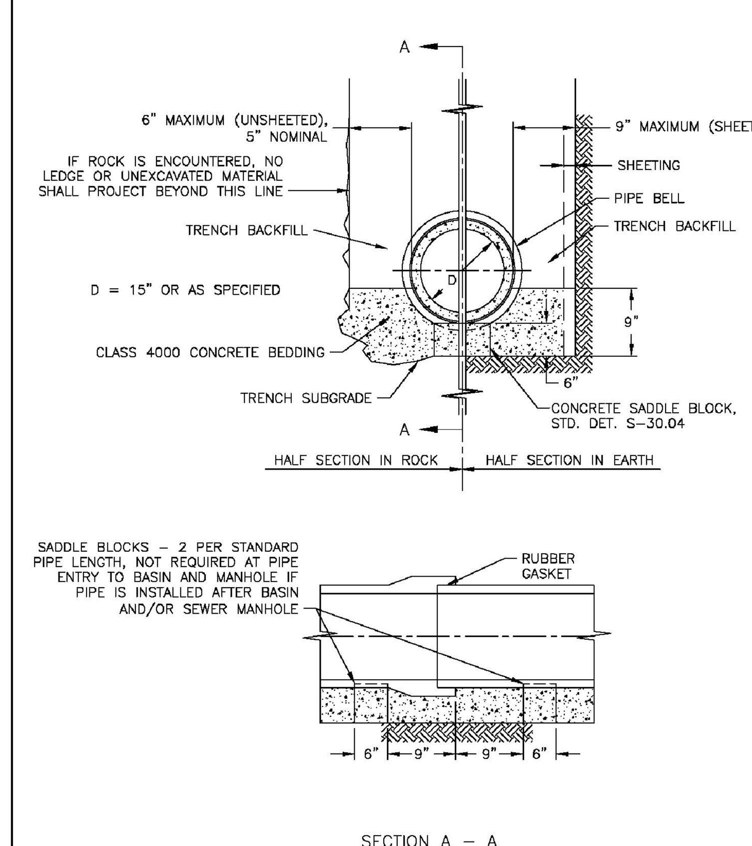

APPROVED DATE: June 20, 2003
DIRECTOR, DEPARTMENT OF ENGINEERING AND TECHNICAL SERVICES
REVISION NO.: 0
DATE: 6/20/03
PREPARED BY: OBG/BKJV
CHECKED BY: W.DARROW

STANDARD DETAIL
CATCH BASIN CONNECTION PIPE TRENCH LAYING CONDITION

DISTRICT OF COLUMBIA
WATER AND SEWER AUTHORITY
M-31.21
1 OF 1

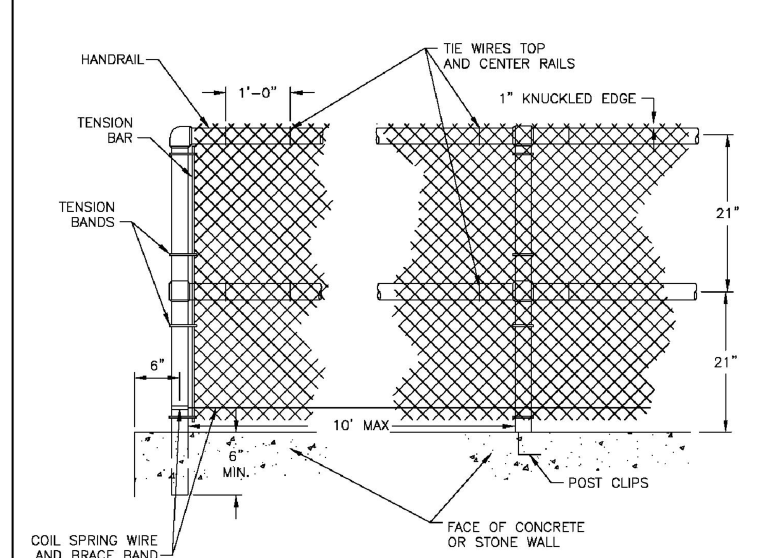

NOTE:
CHAIN LINK WIRE TO BE INSTALLED ON OPPOSITE SIDE OF FRAME FROM EXPOSED CONCRETE FACE OF WALL.

APPROVED DATE: June 20, 2003
DIRECTOR, DEPARTMENT OF ENGINEERING AND TECHNICAL SERVICES
REVISION NO.: 0
DATE: 6/20/03
PREPARED BY: OBG/BKJV
CHECKED BY: W.DARROW

STANDARD DETAIL
CHAIN LINK FENCING FOR HEADWALLS

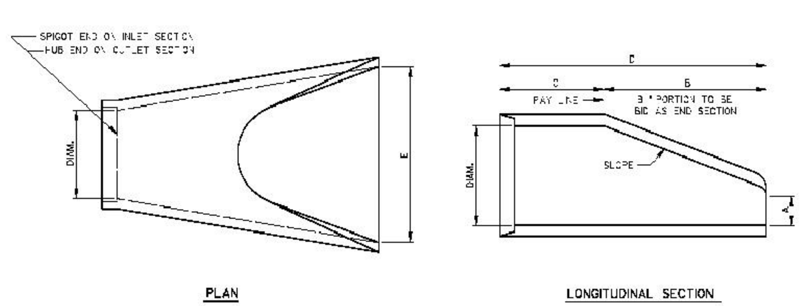

TABLE OF DIMENSIONS						
CONCRETE END SECTION						
DIAM.	SLOPE	A	B	C	D	E
5"	3:1	6 1/2	2'-4"	3'-10	6'-2	2'-5"
8"	3:1	0 1/2"	2'-2"	4'-0"	6'-2	3'-0"
24"	3:1	1"	3'-7"	2'-8	6'-3	4'-0"
30	3:1	1'-1"	4'-5"	1'-0	6'-3	5'-0"
36	3:1	1'-3 1/2"	5'-3"	2'-11"	8'-2"	6'-0
42"	3:1	1'-9 1/4"	5'-5"	2'-10	8'-3	6'-6
48"	3:1	2'-	6'-0	2'-2	6'-2	7'-0"
54"	2.4:1	2'-3	5'-2"	2'-10	6'-0"	7'-5"
60"	2:1	2'-7	4'-	3'-8 1/2"	8'-7 1/2	8'-0"
66	2:1	2'-4	8'-6	1'-9"	8'-3	8'-6"
72"	2:1	2'-0"	6'-6	1'-9"	8'-3	9'-0"

NOTES:
1. END SECTIONS MUST BE REINFORCED TO CONFORM WITH CLASS IV PIPE.
2. CONTRACTOR HAS OPTION OF FURNISHING END SECTIONS CONFORMING TO DETAILS ON THIS SHEET OR END SECTIONS CONFORMING TO DETAILS ON DWG. NO. 314.02.

DATE | APPR. | REVISED | ISSUED: | REFERENCE
RECOMMENDED: DEPUTY CHIEF ENGINEER
APPROVED: CHIEF TRANSPORTATION ENGINEER

FLARED END-SECTION
(FOR 15" - 72" CONCRETE PIPE CULVERTS)

d. DISTRICT OF COLUMBIA DEPARTMENT OF TRANSPORTATION
DWG. NO. 314.03

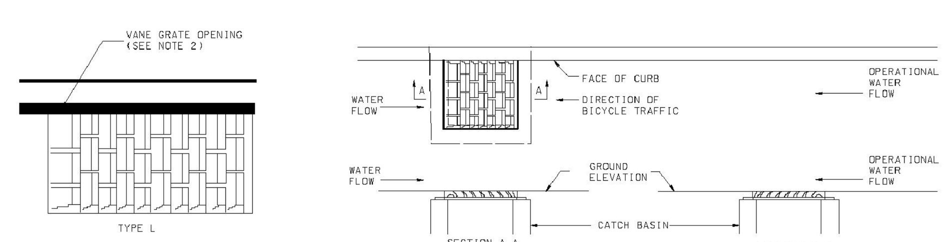

NOTES:
1. GRATE TYPES ARE ONLY CONSIDERED BICYCLE SAFE WITH THE CURB ORIENTATION AS SHOWN.
2. VANE GRATE OPENINGS ARE DESIRABLE IN LOCATIONS WHERE HIGHER HYDRAULIC CAPACITY IS NEEDED. THE GATE MUST BE ORIENTED WITH THE DIRECTION OF FLOW AS SHOWN IN THE DETAIL.
3. GRATE TYPES SHOWN ARE BASED UPON NEENAH FOUNDRY MODEL NUMBERS. OTHER MANUFACTURER GRATES MAY BE INSTALLED IF THEY MEET THE GRATE DESIGN SPECIFICATIONS SHOWN HERE.

RECOMMENDED: DEPUTY CHIEF ENGINEER
APPROVED: CHIEF TRANSPORTATION ENGINEER
DATE | APPR. | REVISED | ISSUED: | REFERENCE

BICYCLE SAFE STORMWATER GRATES

d. DISTRICT OF COLUMBIA DEPARTMENT OF TRANSPORTATION
DWG. NO. 616.26

DDOE DISTRICT DEPARTMENT OF THE ENVIRONMENT

GOVERNMENT OF THE DISTRICT OF COLUMBIA
DISTRICT DEPARTMENT OF THE ENVIRONMENT
1200 FIRST STREET NE, WASHINGTON, DC 20002

GREENHORNE & O'MARA
CONSULTING ENGINEERS
6110 FROST PLACE LAUREL, MD 20707
PHONE: (301) 982-2800 FAX: (301) 220-2619
www.g-and-o.com
FLORIDA KANSAS MARYLAND NORTH CAROLINA PENNSYLVANIA VIRGINIA WEST VIRGINIA

CLEAR CREEKS CONSULTING
1317 Knopp Road, Jarrettsville, Maryland 21084 (410) 692-2164

BayLand Consultants & Designers, Inc.
"Integrating Engineering and Environment"
1321Mercedes Drive, Suite C Hanover, Maryland 21076

STANDARD DETAILS
FOR
BROAD BRANCH STREAM RESTORATION PROJECT
WASHINGTON, DISTRICT OF COLUMBIA

JANUARY 2011